MONARCH
SPECIALTIES INC.

LAST UPDATE
04/24/2024

BAR

WWW.MONARCHSPEC.COM
4155 AUTOROUTE CHOMEDEY LAVAL, QUEBEC, H7P 0A8
TOLL FREE: 1.800.667.7954 - TEL: 450.628.4488 - FAX: 450.628.3888

MONARCH
SPECIALTIES INC.

I 2398

I 2397

I 2399

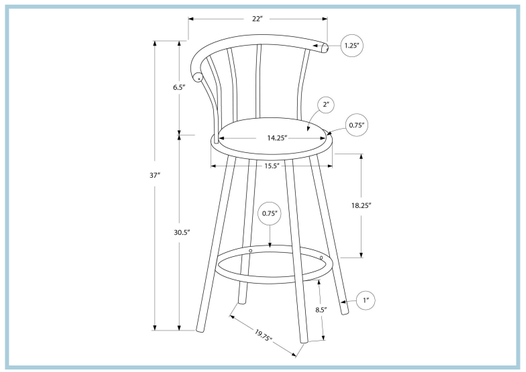

I 2398 - BARSTOOL - 2PCS / 36"H / SWIVEL / BLACK METAL
I 2397 - BARSTOOL - 2PCS / 36"H / SWIVEL / WHITE METAL
I 2399 - BARSTOOL - 2PCS / 36"H / SWIVEL / SILVER METAL

BAR

I 2345 / I 2398

I 2345 - HOME BAR - 24"X 36"/ ESPRESSO / BLACK METAL SPACESAVER
I 2398 - BARSTOOL - 2PCS / 36"H / SWIVEL / BLACK METAL

BAR

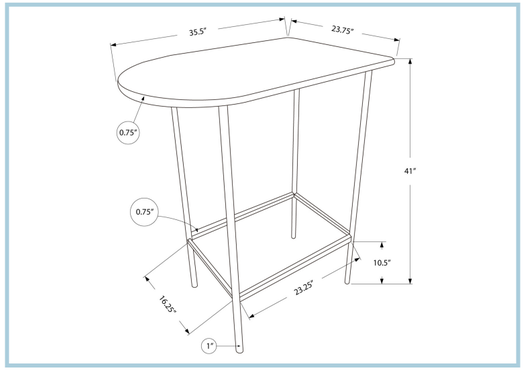

I 2335

MONARCH SPECIALTIES INC.

I 2325

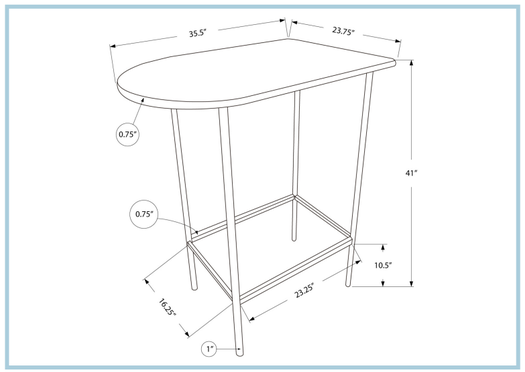

I 2335 - HOME BAR - 24"X 36" / BLACK / SILVER METAL SPACESAVER
I 2325 - HOME BAR - 24"X 36" / GREY MARBLE / CHARCOAL METAL

BAR

I 2376

MONARCH SPECIALTIES INC.

I 2315

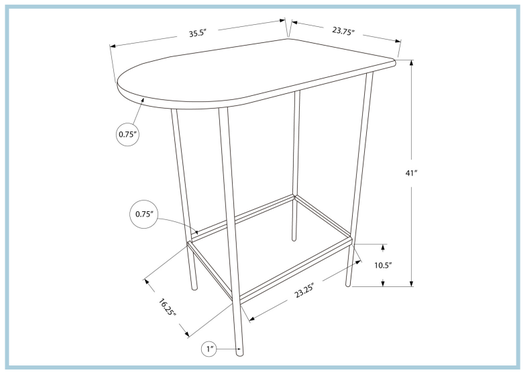

I 2376 - HOME BAR - 24"X 36" / WHITE TOP AND METAL SPACESAVER
I 2315 - HOME BAR - 24"X 36" / ESPRESSO MARBLE / METAL

BAR

MONARCH
SPECIALTIES INC.

I 2375

I 2377

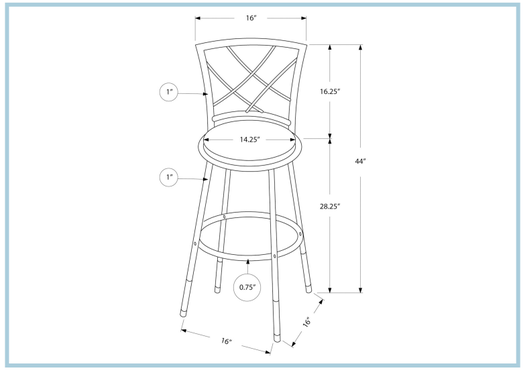

I 2375 - BARSTOOL - 2PCS / SWIVEL / BLACK /BLACK LEATHER-LOOK SEAT
I 2377 - BARSTOOL - 2PCS / SWIVEL / WHITE / GREY FABRIC SEAT

BAR

I 2310

I 2310 - HOME BAR - 30"DIA / ESPRESSO MARBLE / COFFEE METAL

BAR

MONARCH SPECIALTIES INC.

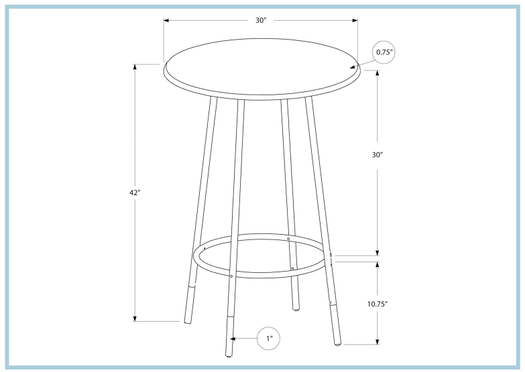

MONARCH
SPECIALTIES INC.

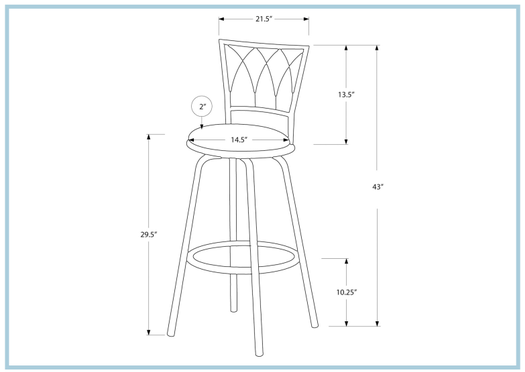

I 2393 - BARSTOOL - 2PCS / 43"H / SWIVEL / DARK COFFEE METAL

BAR

MONARCH SPECIALTIES INC.

I 2296

I 2298

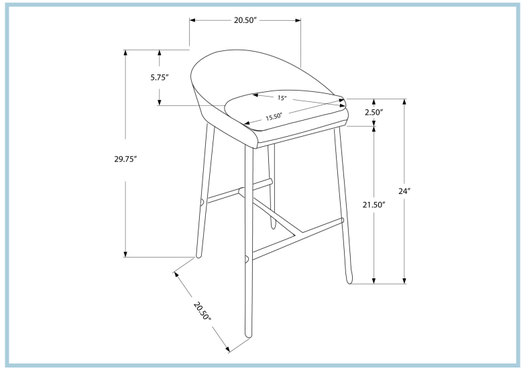

I 2296 - BARSTOOL - 2PCS / WHITE / CHROME BASE / COUNTER HEIGHT
I 2298 - BARSTOOL - 2PCS / GREY FABRIC / CHROME / COUNTER HEIGHT

BAR

MONARCH
SPECIALTIES INC.

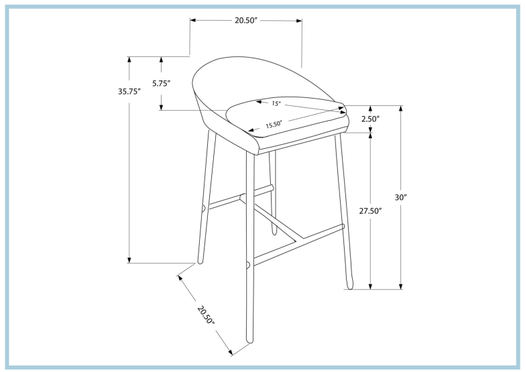

I 2299 - BARSTOOL - 2PCS / GREY FABRIC / CHROME BASE / BAR HEIGHT

BAR

I 7754

I 7754 - BARSTOOL - 40"H / BLACK LEATHER-LOOK / BLACK METAL
I 7750 - BARSTOOL - 40"H / WHITE LEATHER-LOOK / WHITE METAL
I 7752 - BARSTOOL - 40"H / GREY LEATHER-LOOK / BLACK METAL

BAR

MONARCH SPECIALTIES INC.

I 7750

I 7752

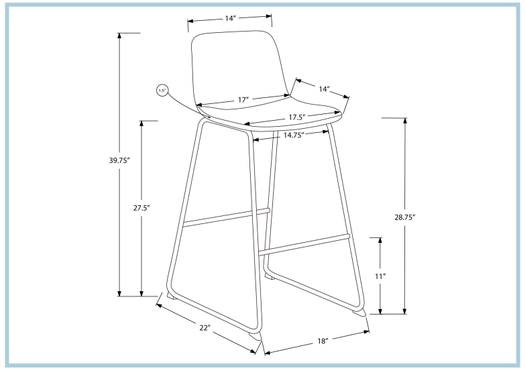

I 7751

MONARCH SPECIALTIES INC.

I 7753

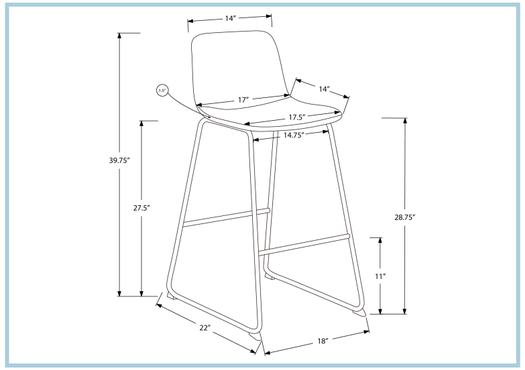

I 7751 - BARSTOOL - 40"H / TAUPE LEATHER-LOOK / BLACK METAL
I 7753 - BARSTOOL - 40"H / BROWN LEATHER-LOOK / BLACK METAL

BAR

MONARCH SPECIALTIES INC.

I 2381

I 2382

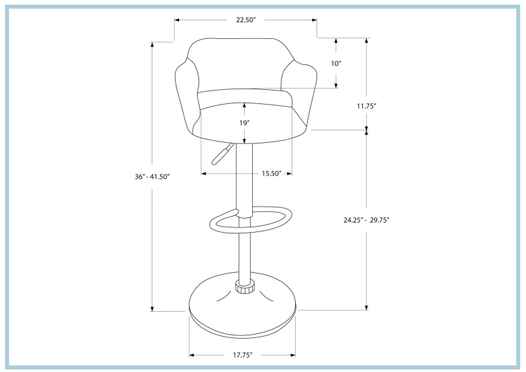

I 2381 - BARSTOOL - BLACK / BLACK METAL HYDRAULIC LIFT
I 2382 - BARSTOOL - WHITE / WHITE METAL HYDRAULIC LIFT

BAR

I 2363

MONARCH SPECIALTIES INC.

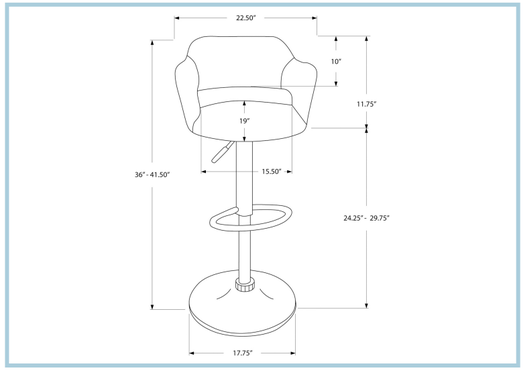

I 2363 - BARSTOOL - GREY FABRIC / CHROME METAL HYDRAULIC LIFT

BAR

MONARCH
SPECIALTIES INC.

I 2357

I 2358

I 2364

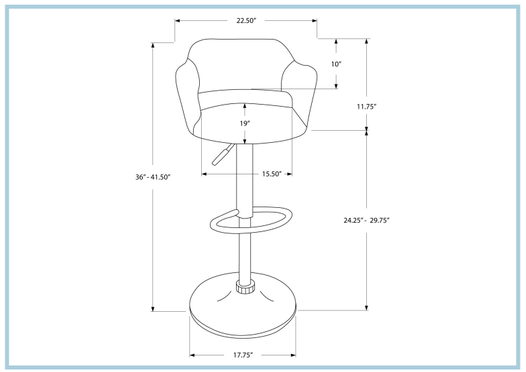

I 2357 - BARSTOOL - BLACK / CHROME METAL HYDRAULIC LIFT
I 2358 - BARSTOOL - WHITE / CHROME METAL HYDRAULIC LIFT
I 2364 - BARSTOOL - LIGHT GREY / CHROME METAL HYDRAULIC LIFT

BAR

MONARCH
SPECIALTIES INC.

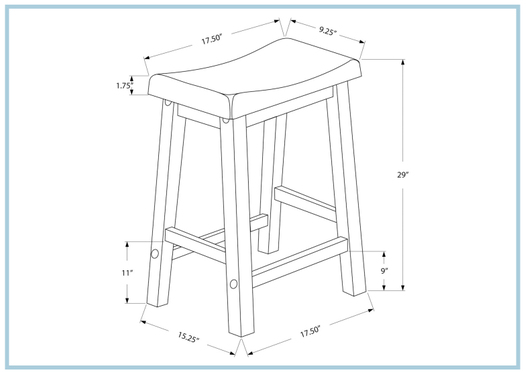

I 1534 - BARSTOOL - 2PCS / 29"H / WHITE SADDLE SEAT

BAR

I 1533

MONARCH SPECIALTIES INC.

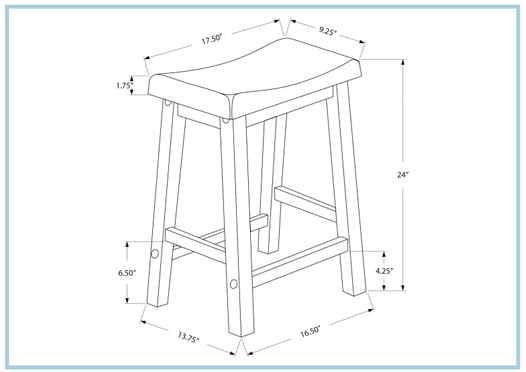

I 1533 - BARSTOOL - 2PCS / 24"H / WHITE SADDLE SEAT

BAR

I 1260

MONARCH SPECIALTIES INC.

I 1262

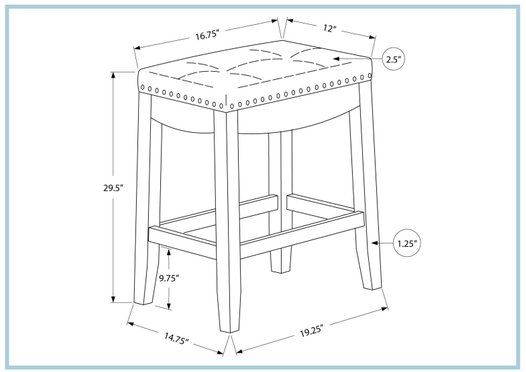

I 1260 - BARSTOOL - 2PCS / 29"H / BLACK LEATHER-LOOK / ESPRESSO
I 1262 - BARSTOOL - 2PCS / 29"H / GREY LEATHER-LOOK / WHITE

BAR

I 1261

MONARCH SPECIALTIES INC.

I 1263

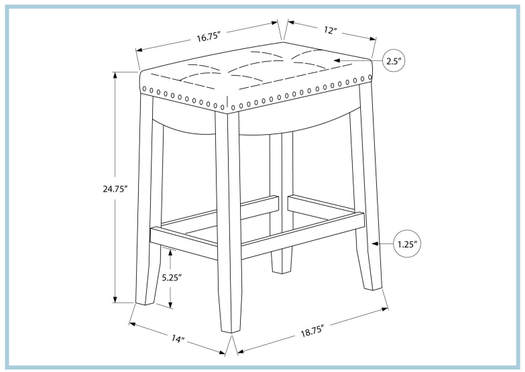

I 1261 - BARSTOOL - 2PCS / 24"H / BLACK LEATHER-LOOK / ESPRESSO
I 1263 - BARSTOOL - 2PCS / 24"H / GREY LEATHER-LOOK / WHITE

BAR

I 1238

MONARCH SPECIALTIES INC.

I 1236

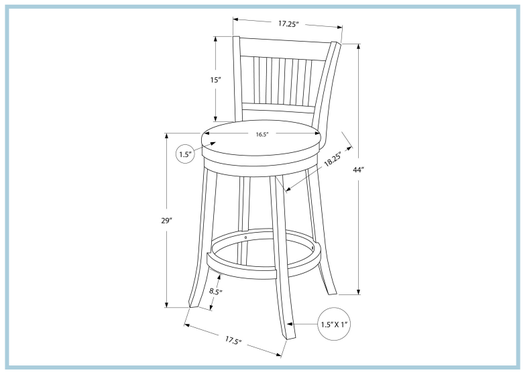

I 1238 - BARSTOOL - 2PCS / 44"H / WHITE / SWIVEL BAR HEIGHT
I 1236 - BARSTOOL - 2PCS / 44"H / ESPRESSO / SWIVEL BAR HEIGHT

BAR

I 1239

MONARCH SPECIALTIES INC.

I 1237

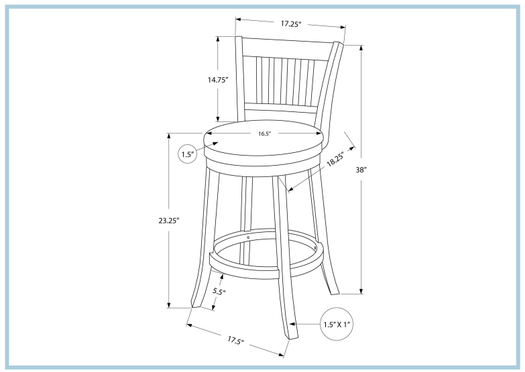

I 1239 - BARSTOOL - 2PCS / 39"H / WHITE / SWIVEL COUNTER HEIGHT
I 1237 - BARSTOOL - 2PCS / 39"H / ESPRESSO / SWIVEL COUNTER HEIGHT

BAR

I 1231

MONARCH SPECIALTIES INC.

I 1233

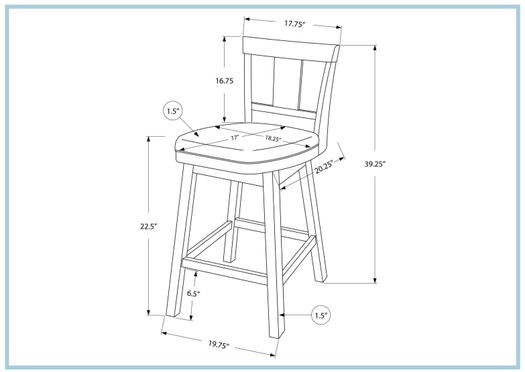

I 1231 - BARSTOOL - 2PCS / 39"H / ESPRESSO / SWIVEL COUNTER HEIGHT
I 1233 - BARSTOOL - 2PCS / 39"H / WHITE / SWIVEL COUNTER HEIGHT

BAR

I 1230

MONARCH SPECIALTIES INC.

I 1232

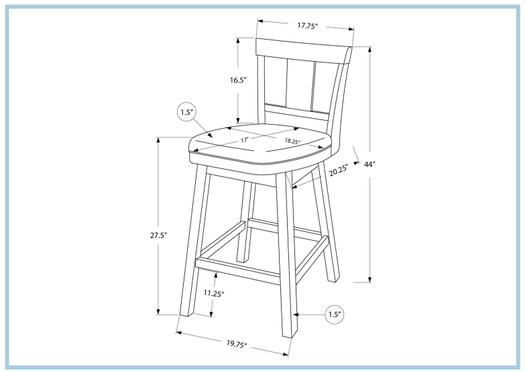

I 1230 - BARSTOOL - 2PCS / 44"H / ESPRESSO / SWIVEL BAR HEIGHT
I 1232 - BARSTOOL - 2PCS / 44"H / WHITE / SWIVEL BAR HEIGHT

BAR

MONARCH
SPECIALTIES INC.

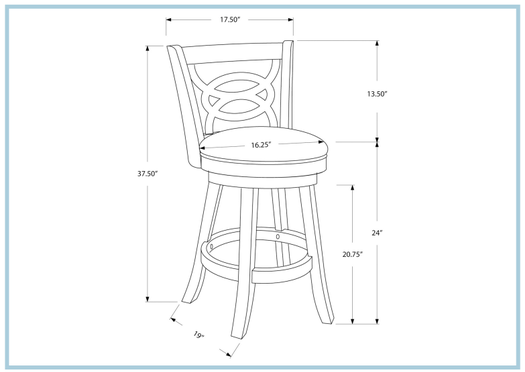

I 1252

I 1252 - BARSTOOL - 2PCS / 38"H / SWIVEL / OAK COUNTER HEIGHT

BAR

I 1251

MONARCH SPECIALTIES INC.

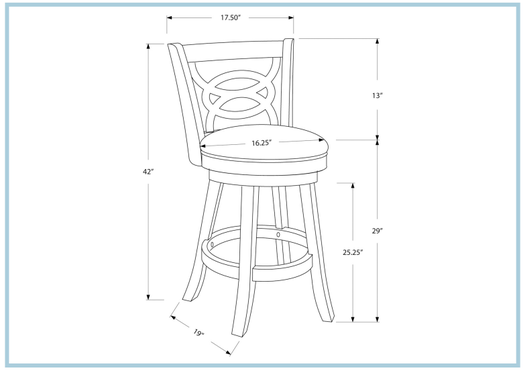

I 1251 - BARSTOOL - 2PCS / 42"H / SWIVEL / DARK OAK BAR HEIGHT

BAR

I 1242

MONARCH SPECIALTIES INC.

I 1243

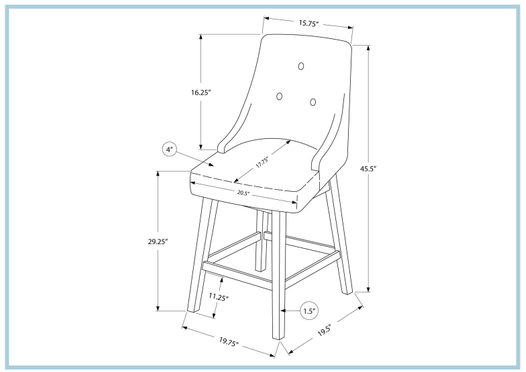

I 1242 - BARSTOOL - 2PCS / 46"H / BLACK LEATHER-LOOK / SWIVEL
I 1243 - BARSTOOL - 2PCS / 46"H / GREY LEATHER-LOOK / SWIVEL

BAR

I 3347

I 3347 - HOME BAR - 40"H / BLACK METAL WINE BOTTLE AND GLASS RACK

BAR

MONARCH SPECIALTIES INC.

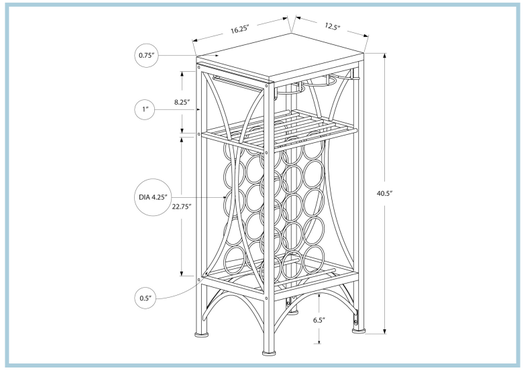

I 2543

I 2543 - HOME BAR - 60"H / ESPRESSO LADDER STYLE

BAR

MONARCH SPECIALTIES INC.

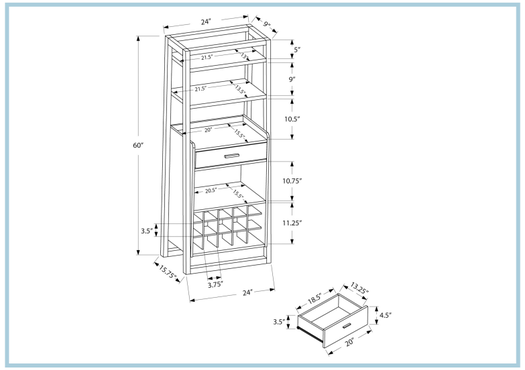

MONARCH
SPECIALTIES INC.

WWW.MONARCHSPEC.COM
4155 AUTOROUTE CHOMEDEY LAVAL, QUEBEC, H7P 0A8
TOLL FREE: 1.800.667.7954 - TEL: 450.628.4488 - FAX: 450.628.3888